SPEFICATION SHEET

GALUX PRO

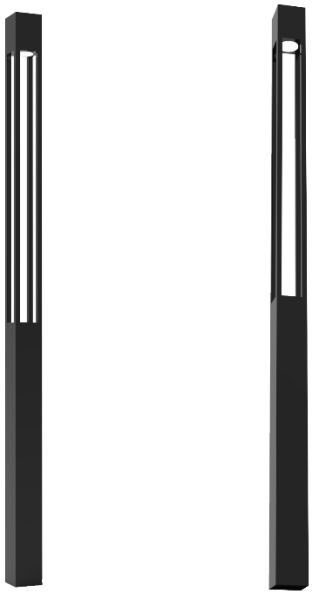

LED Mono Pole

2D Dimensions

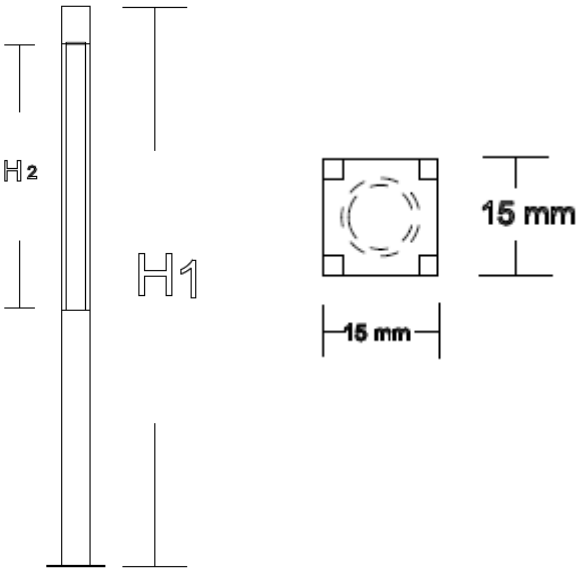

Technical Characteristics

Nominal Power	30 W
Total Lumen	3000 LM
LED Type	COB Philips
CCT	3000-4000°K
CRI	>80
Beam Angle	180°
Protection (IP)	IP65
Operation Temp.	-10 to 55 °C
Dimension(mm)	As Shown in drawings
Mounting	Ground mounted
Warranty	3 - 5 years

Electrical Characteristics

Power Supply	LED Driver
Voltage Range	200-240Vac
Power Factor	>0.95
Current (RMS)	144mA

Materials

Body	Electrostatically coated Alu. Sections
Emitting surface	clear glass
Reflector	NONE

Code	Type	CCT
Mono200.30.K--	LED Pole (Mono) Height 200 cm 30W	3000°K / 4000°K
Mono250.30.K--	LED Pole (Mono) Height 250 cm 30W	3000°K / 4000°K
Mono300.30.K--	LED Pole (Mono) Height 300 cm 30W	3000°K / 4000°K

PRO LIGHT
Pro Light Egypt For Electrical Industries

Address: Plot 137, Extension of the Six Industrial Zone 6th of October City, Giza - Egypt, **Phone:** 0238349235 – 01024507555
Email: info@prolight-eg.com, **Website:** www.prolight-eg.com

GALUX PRO